SNAPNRACK UR-40 RAIL SHOWN SPLICED TOGETHER WITH THE SNAPNRACK ULTRA RAIL SPLICE.

TORQUE SPECIFICATIONS:

5⁄16"Ø NUTS & BOLTS, 10-16 FT-LBS

CENTER SPLICE BETWEEN THE TWO BONDING CLIPS AS SHOWN IN "SPLICE ALIGNMENT LIMITS" VIEW

REVISION:			
A	11/7/2017	NEW DETAIL	MA

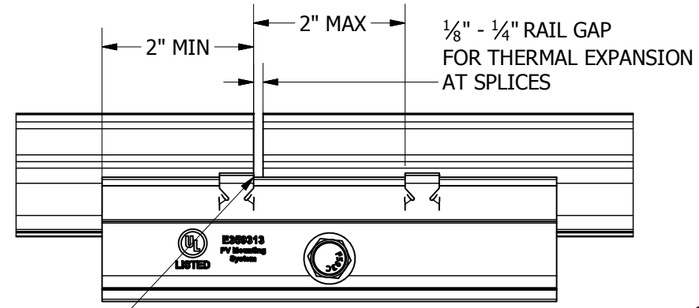

SPLICE ALIGNMENT LIMITS

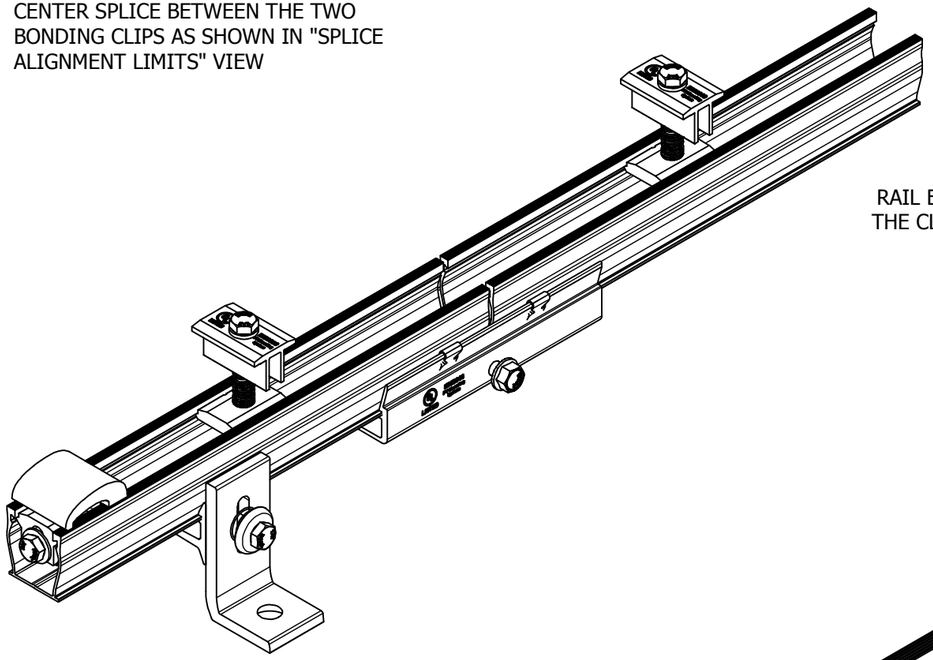

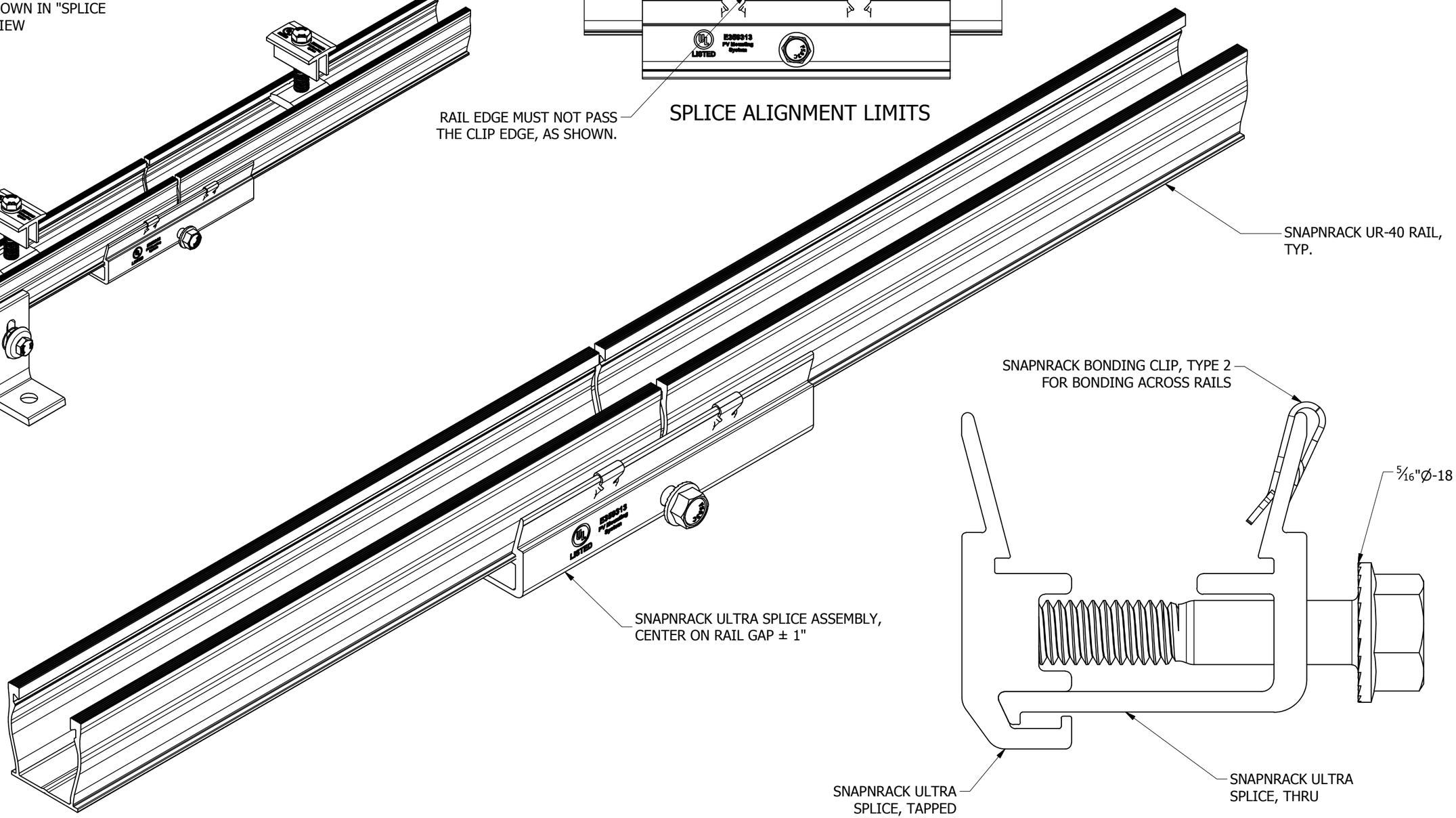

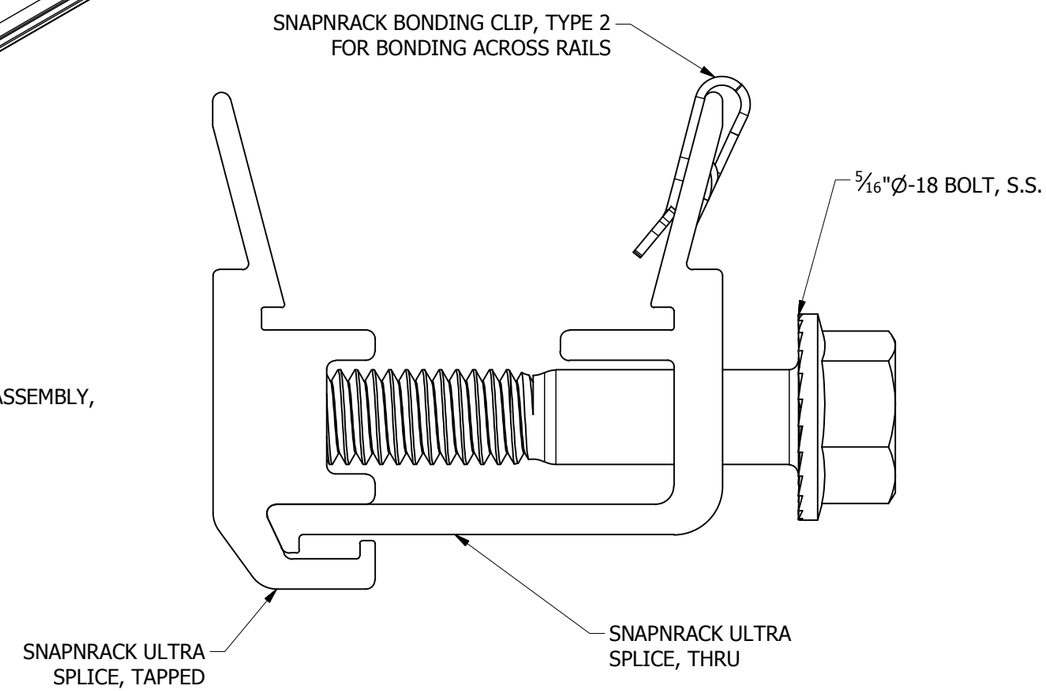

SnapNrack™ Solar Mounting Solutions	Sunrun South LLC 595 MARKET STREET, 29TH FLOOR • SAN FRANCISCO, CA 94105 USA PHONE (415) 580-6900 • FAX (415) 580-6902 THE INFORMATION IN THIS DRAWING IS CONFIDENTIAL AND PROPRIETARY. ANY REPRODUCTION, DISCLOSURE, OR USE THEREOF IS PROHIBITED WITHOUT THE WRITTEN CONSENT OF SUNRUN SOUTH LLC.	DESIGNER: M.Affentranger DRAFTER: M.Affentranger APPROVED BY: G.McPheeters	SCALE: DNS DATE: 11/7/2017	PART NUMBER: UR40-D05	DESCRIPTION: UR-40 ULTRA SPLICE DETAILS	REV A