SnapNrack™
Solar Mounting Solutions

Ultra Rail

Metal Roof Solutions

The Best Attachment Methods for Metal Roofs

- Preassembled hardware to reduce install time
- The fastest & most secure method for mounting on metal roofs
- Fully sealed & weatherproof to maintain the integrity of the roof
- Single tool installation using a standard 1/2” socket

Start Mounting Solar on Your Metal Roof Today

RESOURCES	snapnrack.com/resources
DESIGN	snapnrack.com/configurator
WHERE TO BUY	snapnrack.com/where-to-buy

SnapNrack Metal Roof Solutions

provide installers with the most intuitive method for mounting Ultra Rail and Series 100 racking to metal roofs. SnapNrack's products are the most effective way of attaching to standing seam, corrugated metal and trapezoidal roofs.

Metal Roof Base

- Provides robust, self-sealing mounting base for metal roofs with a flat mounting surface
- Seals to the roof with integral EPDM rubber washer and top sealing cap
- Completed assembly finishes with L Foot attachment point

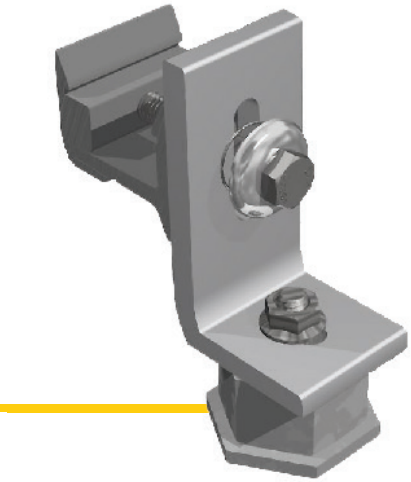

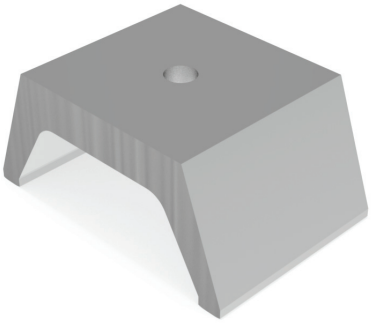

Corrugated Straddle Block

- Allows attachment directly to a structural member covered with corrugated metal roof
- Supports the mounting system without collapsing or crushing the ridge in the metal roof material
- Attaches at the peak of corrugation, out of water channel for improved weatherproofing

Standing Seam Clamps

- Single bolt installation of entire mount and L Foot reduces labor compared to the competition
- Available in two models that work with multiple standing seam metal roof configurations
- Cam-lock attachment provides industry-leading pull out resistance as the clamp tightens more when being pulled

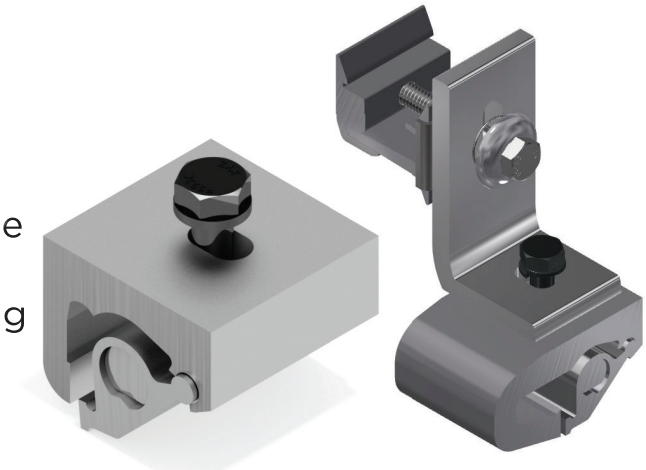

Quality. Performance. Innovation.

SnapNrack solutions are focused on simplifying the installation experience through intuitive products and the best wire management in the industry.

SnapNrack™
Solar Mounting Solutions

877-732-2860 **www.snapnrack.com** **contact@snapnrack.com**

© 2019 by SnapNrack Solar Mounting Solutions. All rights reserved